GROHE
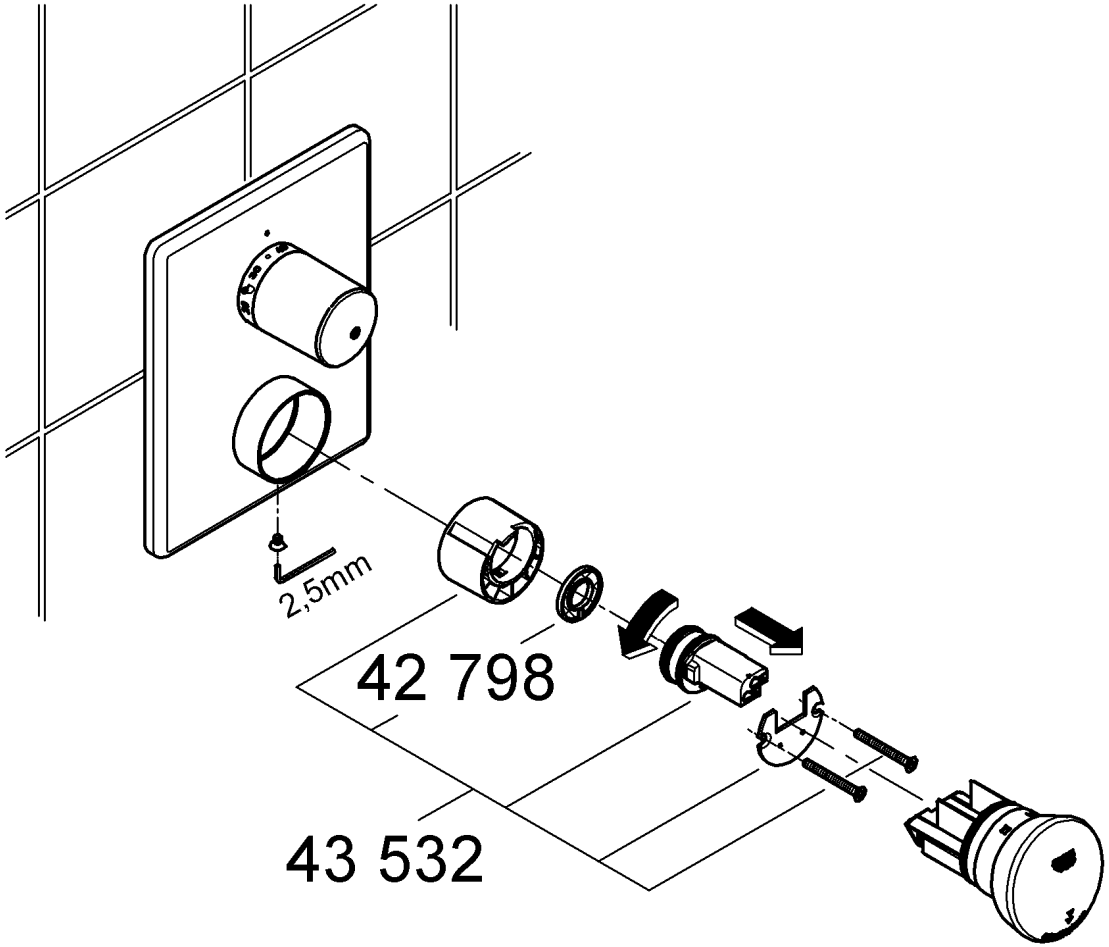
ENJOY WATER®